111241-00

MODEL	A				VOLUME			DOME VOLUME			WEIGHT	
	mm	inch	+/- mm	+/- inch	liters	U.S.gal	cubic FT	liters	U.S.gal	cubic FT	Kg	LBS
24x72	1918	75.51	15	0.59	473	125.0	16.71	37.95	10.02	1.34	54.2	119.2
24x65	1717	67.60	15	0.59	425	112.3	15.01	37.95	10.02	1.34	50.1	110.2

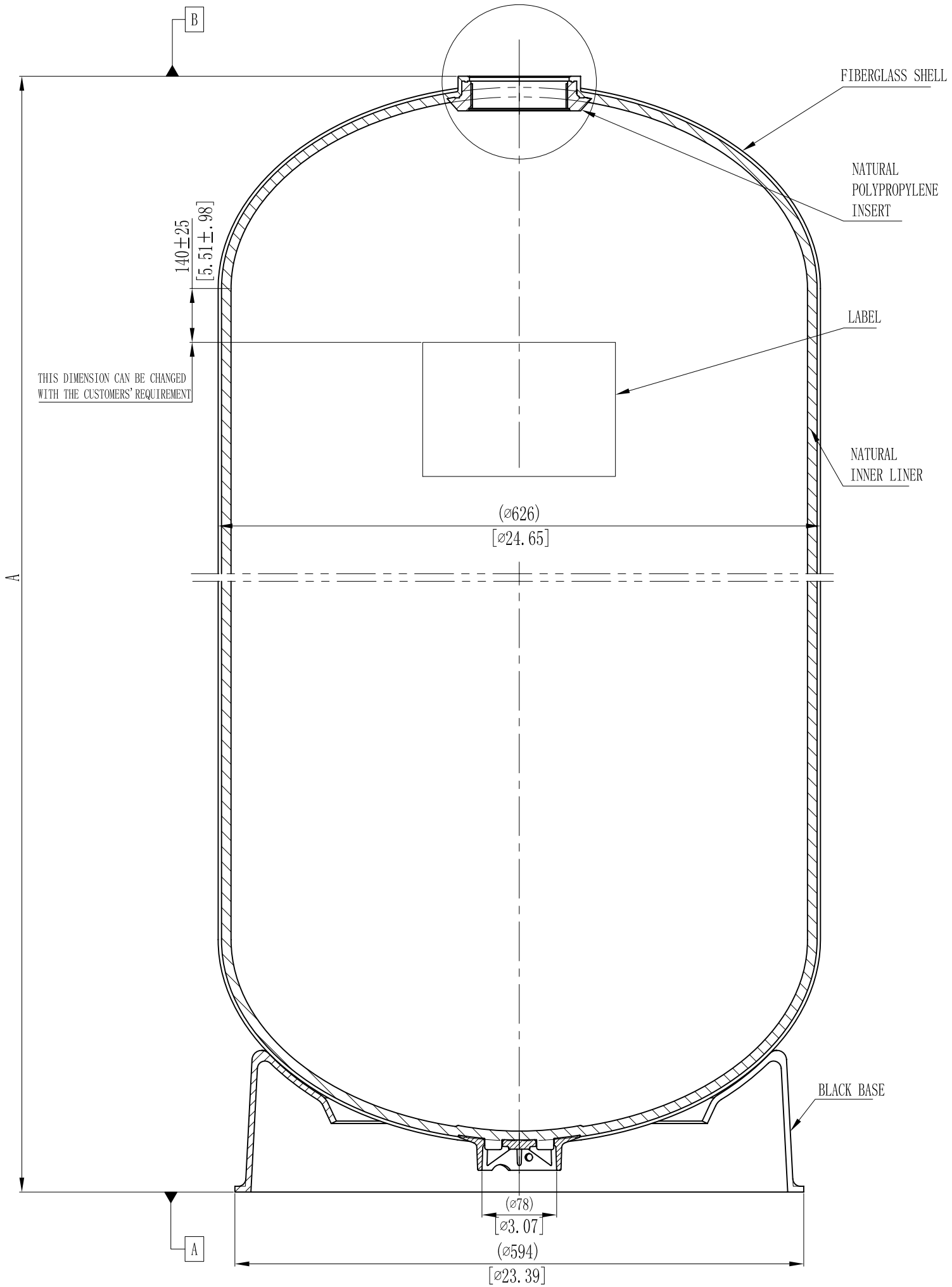

1:2.5

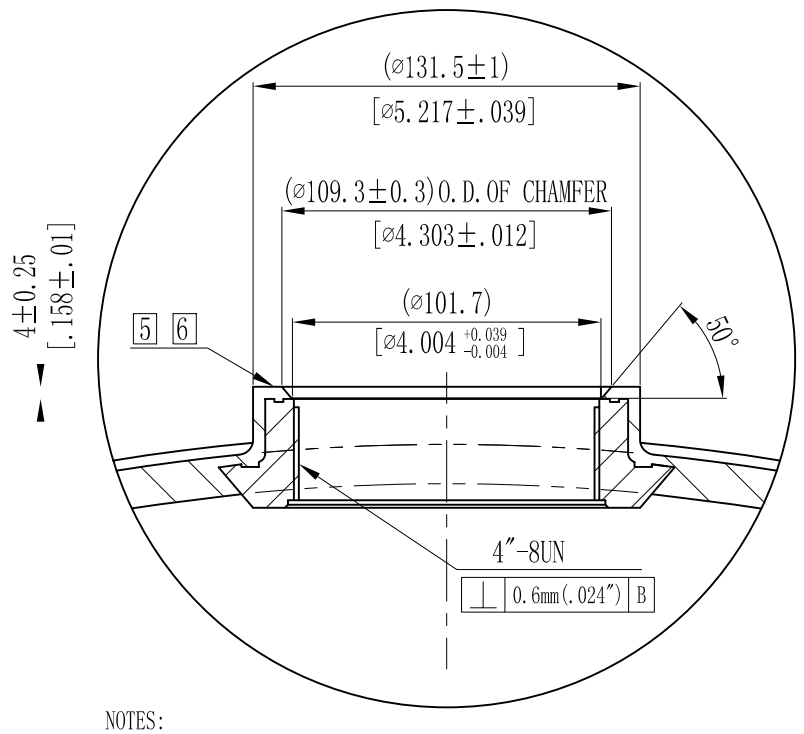

NOTES:

1. TANK MUST MEET ALL APPLICABLE SPECIFICATIONS OF NSF/ANSI 044 STANDARD, LATEST REVISION.
2. OPERATING SPECIFICATIONS:
   - A. MAXIMUM WORKING PRESSURE - 150 PSI(10.5BAR)
   - B. TEMPERATURE RANGE - 34-120° F(1-49℃)
   - C. MAXIMUM VACUUM - 5"Hg(127mm Hg)
3. VISUAL LINER INSPECTION
   - A. NO MORE THAN 10 INTERNAL OR EXTERNAL BLEMISHES OR BURNT DEBRIS.
   - B. NO INTERNAL OR EXTERNAL BLEMISHES OR BURNT DEBRIS LARGER THAN 3×3mm.
   - C. NO INTERNAL BLEMISHES OR BURNT DEBRIS ALLOWED.
4. ALL GLASS STRANDS FROM FIBERGLASS LINER TO BE BONDED AND COVERED.

5. SURFACE TO BE FREE OF NICKS, SCRATCHES, RESIN AND GLASS.

6. SURFACE FINISH.

7. DIMENSIONS IN PARENTHESIS ARE REFERENCE ONLY.
8. DIMENSIONS IN SQUARE PARENTHESIS ARE INCH UNIT.
10. USING A STANDARD LEVEL WITH TANK POSITIONED ON A LEVEL SURFACE, DATUM B TO BE PARALLEL WITH DATUM A. BUBBLE OF LEVEL MUST FALL COMPLETELY WITHIN LINES WHEN MEASURED AT 90° INTERVALS.